Preliminary Land Use Service (PLUS)

Delaware State Planning Coordination

122 William Penn Street • Dover, DE 19901 • Phone: 302-739-3090 • Fax: 302-739-5661

Purpose of PLUS - -The PLUS process is intended to provide consolidated State comments regarding the proposed project. The Applicant is encouraged to submit the application during the concept stages of planning as this process often offers recommendations for changes to the plan. The application should be submitted after the pre-application meeting with the local jurisdiction but before formal application is made.

Please complete this PLUS application in its entirety. **All questions must be answered. If a question is unknown at this time or not applicable, please explain.** Unanswered questions on this form could lead to delays in scheduling your review. This form will enable the state staff to review the project before the scheduled meeting and to have beneficial information available for the applicant and/or developer at the time of review. If you need assistance or clarification, please call the State Planning Office at (302) 739-3090.

PLUS Number (to be completed by OSPC): _____

Investment Level Per Strategies for State Policies and Spending (to be determined by OSPC): _____

1. Project Title/Name: Chesapeake AgriSoil Facility

2. Location (please be specific): 28338 Enviro Way, Seaford, DE

3. Parcel Identification #: 1-32-11.0 Parcel 41

4. County or Local Jurisdiction Name: where project is located: Sussex County

5. If contiguous to a municipality, are you seeking annexation: No

6. Owner's Name: Randall M. Day, Perdue AgriRecycle, LLC

Address: 7036 Zion Church Road

City: Salisbury | State: MD | Zip: 21804

Phone: 410-543-3509 | Fax: | Email: Randy.Day@Perdue.com

7. Equitable Owner/Developer **(This Person is required to attend the PLUS meeting)**: Charles Gifford, Chesapeake AgriSoil, LLC

Address: 28338 Enviro Way

City: Seaford | State: DE | Zip: 19973

Phone: 401-644-7200 | Fax: | Email: Charles.H.Gifford@gmail.com

8. Project Designer/Engineer: Axiom Engineering, LLC - Kenneth R. Christenbury, P.E.

Address: 18 Chestnut Street

City: Georgetown | State: DE | Zip: 19947

Phone: 302-855-0810 | Fax: 302-855-0812 | Email: ken@axeng.com

9. **Please Designate a Contact Person, including phone number, for this Project: Kenneth R. Christenbury, P.E.**

Information Regarding Site:

10. Type of Review: ☒ Rezoning, if not in compliance with certified comprehensive plan ☐ Site Plan Review ☐ Subdivision

11. Brief Explanation of Project being reviewed: Project will compost poultry waste to produce a soil amendment for use in agriculture and landscaping
If this property has been the subject of a previous LUPA or PLUS review, please provide the name(s) and date(s) of those applications.

12. Area of Project (Acres +/-): 14 Number of Residential Units: 0 Commercial square footage: 0

13. Present Zoning: AR-1 with conditional use	14. Proposed Zoning: Amend existing conditional use
15. Present Use: Fertilizer production	16. Proposed Use: Compost Facility

17. Water: ☐ Central (Community system) ☒ Individual On-Site ☐ Public (Utility)
Service Provider Name:

Will a new public well be located on the site? ☐ Yes ☒ No

18. Wastewater: ☐ Central (Community system) ☒ Individual On-Site ☐ Public (Utility)
Service Provider Name:

Will a new community wastewater system be located on this site? ☐ Yes ☒ No

19. If residential, describe style and market segment you plan to target (Example- Age restricted):

20. Environmental impacts:

How many forested acres are presently on-site? 100 How many forested acres will be removed? 14

To your knowledge, are there any wetlands, as defined by the U.S. Army Corps of Engineers or the Department of Natural Resources and Environmental Control, on the site? ☒ Yes ☐ No

Are the wetlands: ☐ Tidal Acres:
☒ Non-tidal Acres: 50

If "Yes", have the wetlands been delineated? ☐ Yes ☒ No

Has the Army Corps of Engineers signed off on the delineation? ☐ Yes ☒ No

Will the wetlands be directly impacted and/or do you anticipate the need for wetland permits? ☐ Yes ☒ No If "Yes", describe the impacts:

How close do you anticipate ground disturbance to wetlands, streams, wells, or waterbodies? 50 Feet

21. Does this activity encroach on or impact any tax ditch, public ditch, or private ditch (ditch that directs water off-site)? ☒ Yes ☐ No

22. List the proposed method(s) of stormwater management for the site: Bioswale, sediment forebay, dry extended detention basin

23. Is open space proposed? ☐ Yes ☒ No If "Yes," how much? Acres:

What is the intended use of the open space (for example, active recreation, passive recreation, stormwater management, wildlife habitat, historical or archeological protection)?

24. Are you considering dedicating any land for community use (e.g., police, fire, school)? ☐ Yes ☒ No

25. Please estimate How many vehicle trips will this project generate on an average weekday? A trip is a vehicle entering or exiting. If traffic is seasonal, assume peak season: 70

What percentage of those trips will be trucks, excluding vans and pick-up trucks? 65%

26. Will the project connect to state maintained roads? ☒ Yes ☐ No

27. Please list any locations where this project physically could be connected to existing or future development on adjacent lands and indicate your willingness to discuss making these connections. None

28. Are there existing sidewalks? ☐ Yes ☒ No; bike paths ☐ Yes ☒ No
Are there proposed sidewalks? ☐ Yes ☒ No; bike paths ☐ Yes ☒

Is there an opportunity to connect to a larger bike, pedestrian, or transit network? ☐ Yes ☒ No

29. To your knowledge, is this site in the vicinity of any known historic/cultural resources or sites? ☐ Yes ☒ No

Has this site been evaluated for historic and/or cultural resources? ☐ Yes ☒ No

Would you be open to a site evaluation by the State Historic Preservation Office? ☒ Yes ☐ No

30. To promote an accurate review of your parcel's features, would you permit a State agency site visit? W Yes ☐ No
Person to contact to arrange visit: Wayne Hudson phone number: 410-543-3919

31. Are any federal permits, licensing, or funding anticipated? ☐ Yes ☒ No

I hereby certify that the information on this application is complete, true and correct, to the best of my knowledge.

Randall M Kay
Signature of property owner

10/18/12
Date

Signature of Person completing form
(If different than property owner)

10/12/12
Date

Signed application must be received before application is scheduled for PLUS review.

This form should be returned to the Office of State Planning **electronically** at Dorothy.morris@state.de.us **along with an electronic copy of any site plans and development plans for this site.** Site Plans, drawings, and location maps should be submitted as image files (JPEG, GIF, TIF, etc.) or as PDF files. GIS data sets and CAD drawings may also be submitted. If electronic copy of the plan is not available, contact Dorothy at (302) 739-3090 for further instructions. A signed copy should be forwarded to the Office of State Planning, 122 William Penn Street, Dover, DE 19901. Thank you for this input. Your request will be researched thoroughly. **Please be sure to note the contact person** so we may schedule your request in a timely manner.

Project Description
Chesapeake AgriSoil Facility
28338 Enviro Way
Seaford, Delaware

October 2012

Project Description
Chesapeake AgriSoil Facility
Seaford, Delaware

1.0 Chesapeake Agrisoil, LLC

Chesapeake AgriSoil, LLC is proposing to construct a poultry waste composting facility at 28338 Enviro Way, Seaford, DE. The facility would be located adjacent to Perdue AgriRecycle's existing Micronutrient Plant. The proposed project is being developed by Chesapeake Agrisoil LLC. Chesapeake AgriSoil is jointly owned by US AgriSoil LLC and Perdue AgriRecycle LLC.

2.0 Project Need

Pollution of rivers and lakes as a result of animal manure is a problem nationally. The issue has become an especially sensitive issue for Chesapeake Bay. The Chesapeake Bay is one of North America's largest and most biologically diverse estuary, home to more than 3,700 species of plants and animals. It is approximately 200 miles long, contains more than 11,000 miles of tidal shoreline, and is fed by more than 100,000 creeks, streams, and rivers. The watershed spreads over 64,000 square miles and includes parts of six states—Delaware, Maryland, New York, Pennsylvania, Virginia, and West Virginia—and the entire District of Columbia. As of 2007, approximately 17 million people lived in the Bay watershed. The Bay provides significant economic and recreational benefits, estimated to exceed $33 billion annually, to the watershed's population. The Bay's waters are threatened by pollution from a variety of sources.

According to the EPA, the greatest pollution threats to the Bay are from nutrients (nitrogen and phosphorus) and sediment. Agriculture has been identified as the single largest source of nutrients to the Chesapeake Bay. Agricultural operations deliver nitrogen and phosphorus to the Bay accounting for 38 percent of nitrogen and 45 percent of phosphorus according to the EPA. Seventeen percent of the nitrogen and 26 percent of phosphorus from agriculture is from animal manure, and an additional 6 percent of nitrogen delivered to the Bay comes from livestock and fertilized soil emissions. The EPA has identified three areas which represent the greatest contributions of manure-based agricultural nutrient loads to the Bay:

- *Delmarva Peninsula*: Delaware, and the Eastern Shores of Maryland and Virginia; poultry—broiler chickens—is the dominant industry sector;
- *South-central Pennsylvania*: Susquehanna River watershed/Lancaster and York counties; dairy is the dominant industry sector; to a lesser extent, swine and poultry (broiler and egg-laying chickens) also operate in this priority area; and

- *Shenandoah Valley*: Virginia and West Virginia; poultry— broiler chickens and turkeys— is the dominant industry sector; small- and medium-dairies and to a lesser extent, swine and beef cattle facilities also operate in this priority area.

The watersheds in these areas suffer from significant nutrient imbalances and nutrient-related, local water quality impairments. Densely populated animal agriculture operations in these areas cause the highest agricultural nutrient loads to the Bay by comparison to other areas. Inconsistent implementation of sound nutrient management practices has resulted in manure over-application and nutrient loading.

The proposed Chesapeake Agrisoil Facility will produce compost from poultry hatchery waste, dissolved air flotation residuals (DAF) from wastewater treatment plants at poultry slaughter houses, poultry litter and wood and yard waste. These materials are currently being land applied or composted in outdoor non enclosed composting facilities. The proposed facility is being developed to provide a more environmentally friendly method of handling these waste products and producing a product which can be beneficially used in an environmentally responsible manner.

Compost is a source of nutrients for plants. Land on which compost has been applied requires less fertilizer. More importantly, compost chemically binds nutrients preventing the nutrients from running off into stormwater and also from leaching into groundwater. Compost has a very high water holding ability. Because of this property, compost is widely used for erosion control. The EPA has identified composting of animal manure as a best management practice for the treatment of animal manure.

3.0 Chesapeake Agrisoil Facility

The proposed facility is being constructed at 28338 Enviro Way, Seaford, Delaware on land owned by Perdue AgriRecycle, LLC. The proposed facility is located adjacent to Perdue AgriRecycle LLC's Micronutrient Plant. The facility is being constructed to process poultry wastes generated by Perdue. The facility is being developed in response to the environmental issues identified in section 2.0 above.

Perdue AgriRecycle LLC received a conditional use of land in an AR-1 district in 1999 allowing the construction and operation of the Micronutrient Plant. The conditional use was modified in 2006 to amend the conditions of conditional use approval. Chesapeake AgriSoil LLC intends to request that the conditional use be modified again to allow the construction and operation of the proposed compost facility.

3.1 General Description

The proposed facility will recycle poultry wastes and wood wastes using a specialty "in vessel" processing technology in order to produce quality organic compost for resale. Compost is used in agricultural and landscaping applications.

The poultry wastes which will be composted consists of poultry litter, DAF, hatchery waste and small amounts of miscellaneous wastes as detailed in the table below. A total of 47,800 tons of poultry waste will be composted annually. Wood waste will be mixed with the poultry waste prior to composting to optimize the process by adjusting moisture content, the carbon:nitrogen ratio and porosity of the material to be processed.

The facility is sized to process the following materials:

Feedstock	Tons/year
DAF	38,500
Poultry Litter	5,000
Hatchery Waste	4,000
Bleaching Clay	200
Venture Milling Misc	100
Wood Waste	16,000
Total	63,800

4.0 Facility Layout and Design

The proposed facility is located at 28338 Enviro Way, Seaford, DE (Tax map 1-32-11.00 Parcel 41). The conceptual design of the facility is shown on drawings:

C-1, Rev 0 Project Location
C-2, Rev 0 Existing Conditions
C-3, Rev 0 Site Plan
C-4, Rev 0 Grading Plan
C-5, Rev 0 Compost Sections-Sheet 1
C-6, Rev 0 Compost Sections-Sheet 2
C-7, Rev 0 Biofilter Plan and Sections
A-1, Rev 0 Receiving Building Plan
A-2, Rev 0 Receiving Building Elevations-Sheet 1
A-3, Rev 0 Receiving Building Elevations-Sheet 2

The proposed facility occupies 14 acres. The facility design is based on the "in vessel" processing technology provided by W. L. Gore and Associates Inc. The proposed facility will

include the following elements and is as shown on the drawings listed above. The facility includes the following elements:

- Scale house
- Receiving Building
- DAF Storage Tank
- Heap organics processing
- Screening and product storage
- Biofilter
- Leachate collection
- Storm water collection

4.1 Material Receiving and Mixing

All incoming feedstock is weighed on a truck scale upon arriving at the facility. The facility will receive, on average, 244 tons of poultry waste, and wood waste for composting each week day. This material will be delivered to the site by truck. The DAF will be delivered in tanker trucks. The average daily delivery of 147 tons will be delivered in seven trucks. The average daily delivery of litter will consist of 19 tons and will be delivered in two open top end dump tractor trailers. The daily average delivery of hatchery waste will be 15 tons and will be delivered in one open top end dump tractor trailers. The wood waste will be delivered in open top end dump tractor trailers and dump trucks with a daily average of five trucks.

The Receiving Building is a pre-engineered building with a concrete foundation, concrete floor and includes concrete push walls to allow front end loaders the ability to maneuver in the building while handling the recyclable organic material. The building arrangement is shown on drawings A-1, A-2, and A-3. There are two rolling steel doors in the building for vehicle access. The building includes a bunker for storage of litter and hatchery waste. Trucks delivering litter and hatchery waste will dump in the bunker area inside the receiving building.

The facility will have a 90,000 gallon storage tank for storage of DAF. Truck deliveries of DAF will unload into the storage tank. The tank will be covered. The DAF will be pumped from the tank to the receiving building as required for blending of feedstocks for composting.

Wood waste will be delivered to a storage area on a paved area of the facility. This waste will be sized to 6”minus prior to delivery such that no further processing of this material is required prior to mixing with other feedstocks.

The various feedstocks are mixed in the receiving building by a front end loader. The material is blended to achieve a mixture with the proper C:N ratio, moisture content and porosity for optimum composting. The receiving building has a separate area for mixing feedstocks. Litter and hatchery waste are moved from the storage bunker in the receiving building to the mixing

area by front end loader. The loader moves wood waste from the storage area outside of the building to the mixing area of the building. DAF is pumped from the storage tank to the mixing area. This material is then mixed by front end loader to achieve a homogeneous mixture with a moisture content of 60%. Once it is mixed the material is moved outside into the Gore Cover System.

The receiving building includes a ventilation system consisting of exhaust fans with the capacity to provide four (4) air exchanges per hour. The air exhausted from the building is passed through a Biofilter that removes odors from the exhaust air prior to discharge to the atmosphere.

4.2 Components of the GORE™ Cover System

The GORE™ Cover System utilizes positive aeration and a specially designed cover to create an enclosed system that optimizes the recycling process, controls odors and micro-organisms, separates leachate from storm water and creates a consistent product unaffected by outside environmental conditions. Medium-pressure ventilators connect to in-floor aeration trenches. Stainless steel probes inserted into the pile monitor oxygen and temperature parameters. The data is relayed to and stored in a computer. This data controls the ventilator to keep the heap conditions consistent.

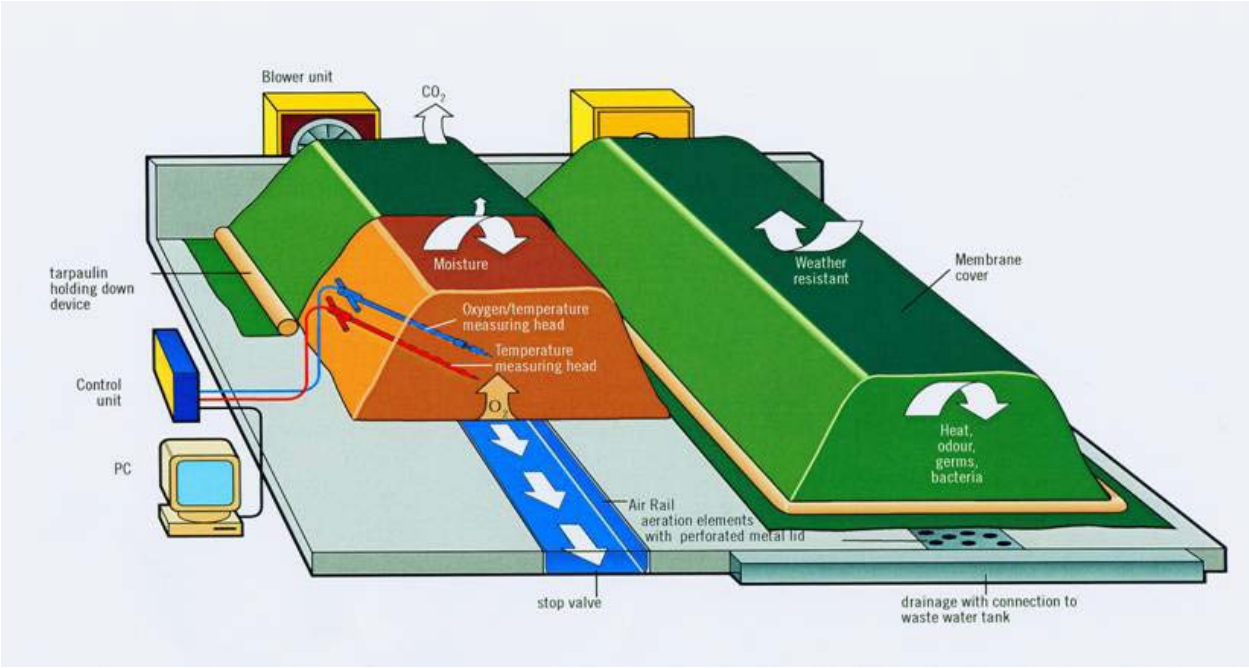

GORE™ Cover System

The covers consist of a specially developed GORE-TEX membrane laminated between two highly robust polyester layers. Because the membrane has just the right pore structure, GORE™ Covers offer more than just storage cover. It is possible to selectively influence the treatment process. The membranes used in waste treatment protect the material in the heaps from the penetration of rainwater and yet allow carbon dioxide and water vapor produced during the process to escape.

The cover acts as a physical barrier against gaseous substances escaping from the rotting material, extensively retaining odors. In addition, a fine film of condensation develops on the inside of the covers during the process, suppressing odors and other gaseous substances. These gases are partly dissolved in the film of water and drop back into the heap where they continue to be broken down by bacteria.

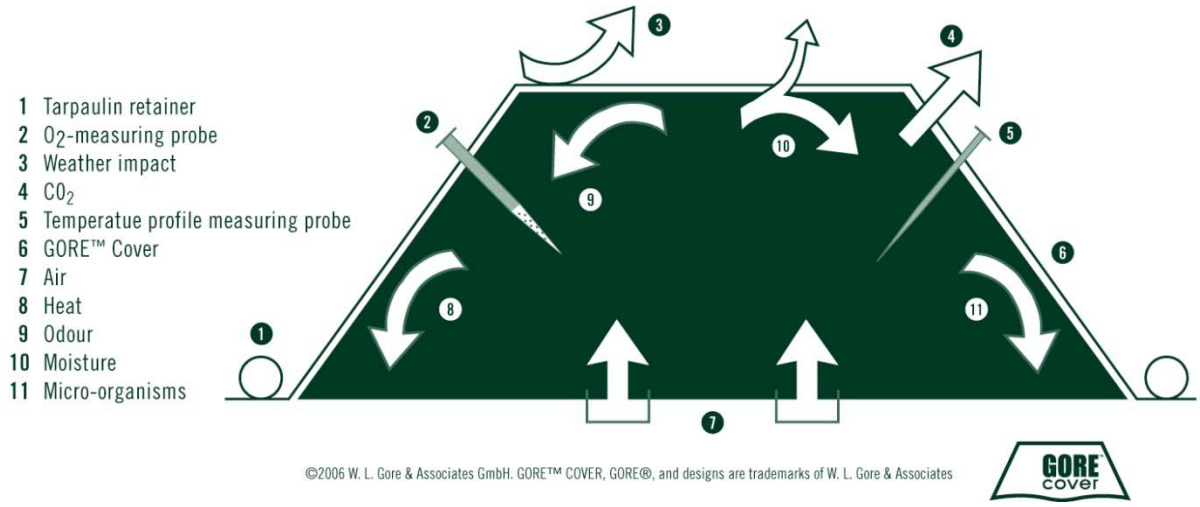

The right choice of membrane influences the extraction of moisture during processing. It prevents the final product from being too wet, yet at the same time ensures that there is sufficient moisture retained to allow the material to be decomposed. The micro-porous structure of the GORE-TEX membrane means that it is practically impossible for microbes to penetrate the membrane.

Numerous microbiological tests have proved that microbes can be reduced by > 99 percent, thus guaranteeing that workers are protected and safe. The insulating effect of the GORE™ Cover and the pressurization by which the system ensures even temperature distribution mean that achieving the necessary temperature for sanitizing the material across the entire cross section of the heap can be guaranteed, even during the winter months. Pathogenic microorganisms are safely destroyed throughout the entire heap.

The GORE™ Cover System is utilized at over 150 installations in more than 20 countries worldwide with more than 2 million tons of material recycled annually.

4.3 Heap Composting

The material leaving the receiving building has been prepared for processing. By mixing the waste materials received, the moisture content, particle size, porosity and carbon/nitrogen ratio have been adjusted to optimal conditions for rapid biological degradation. Processing then begins utilizing the proprietary technology by GORE™. The composting process takes 5 weeks using this system. The composting pad is divided into two sections, Phase I (high rate degradation), and Phase II (maturation). Material remains in the Phase I composting area for 3 weeks, followed by 2 weeks in the Phase II composting area. The temperature of the material composting under the cover is typically 140-170 degrees f during composting. As the process proceeds, the volume of material and mass of material is reduced through biological degradation.

The GORE™ Cover system utilizes heap processing with forced aeration coupled with a semi permeable membrane cover. Each heap is approximately 25 feet wide at the base and approximately 165 feet long and contains approximately 1,000 cubic yards of material. The number of heaps is determined based on the total capacity of the project. The proposed facility will contain 10 phase I heaps and 6 phase II heaps. The heaps are the same size in each section. Two aeration trenches are under each heap. These trenches serve as ducts to provide air to the heap and also to collect leachate coming from the heap. Each heap has a blower to provide air to the material in the heap via the aeration trenches. The trenches are cast in concrete to provide a solid impervious surface. The entire processing pad consists of a concrete slab or asphalt surface, which allows for the collection of all storm water and leachate. Each heap is enclosed by 3’-6” high concrete walls.

The GORE™ Cover system converts a system of open windrows into an in vessel processing system. The cover membrane has a pore structure sized to selectively influence the biological degradation process. The system allows carbon dioxide to pass through the membrane but prevents odor from escaping. The membrane will not allow rain water to pass through to the processing material under the cover.

After a heap is built the GORE™ Cover is placed over the entire heap. The GORE™ system includes a mobile gantry reel for installation and removal of the cover. Once the cover is installed and secured in place, temperature and oxygen probes are installed through the cover into the heap material. The blowers are controlled by a programmable logic controller (PLC) to optimize the process using readings from temperature and oxygen sensors under the cover system.

The process begins with a front end loader moving the material from the receiving building to a heap in the Phase I section to begin the three week processing period. Once a heap is completed, it is covered, the temperature and oxygen probes are installed and the blowers are turned on.

After 21 days in Phase I, the GORE™ Cover is removed from the heap and the material is moved by front end loader to a heap in the Phase II area. Once a heap is completed, the heap is covered and the temperature and oxygen probes are installed and the blowers are turned on.

After 14 days in Phase II, the GORE™ Cover is removed from the heap and the material is moved by front end loader to the curing area. By the time the material reaches the curing area, the material is sufficiently stable with minimal odor such that the cover is not required. The material remains in the curing area for 60 days. At the end of the 60 day curing period, the material is ready for sale and removal from the facility.

4.4 Compost Curing

After 5 weeks of composting, the material is screened in a trommel screen. Screening removes the large pieces of wood and yard waste which have not degraded such that it can pass through the screen. The oversize wood and yard waste which does not pass through the screen is reused in the process. This material will be returned to the receiving building, mixed with feedstock and sent back into the composting process.

The material that passes through the screen is moved to the curing area. The curing area is on an asphalt pad, but the material is not covered and there is no forced aeration. The material is arranged in windrows which are 165 feet long and 10 feet high. This material remains in a windrow for 60 days. During this 60 day period, the biological degradation continues, but at a slower rate than during the Phase I and II composting. The material darkens in color during this stage. The moisture content is typically 35% entering this phase.

At the conclusion of the 60 day curing period, the material is ready for sale and distribution.

4.5 Biofilter

Exhaust air from the receiving building will pass through a biofilter before being discharged to the atmosphere. The ventilation system in the receiving building will provide 4 air changes per hour. The biofilter is designed with a loading rate of 3 cubic feet per minute per square foot. The size of the ventilation system and biofilter is dictated by the size of the receiving building. The biofilter uses a blend of wood chips and compost for the active media. The odor removal efficiency for a biofilter is typically greater than 95 percent.

4.6 DAF Storage Tank

The facility will include two covered 45,000 gallon steel storage tanks. The tanks will contain DAF delivered to the facility. The tanks will also be used to store any leachate collected from the compost heaps and from any leachate generated from rain fall on the biofilter. The DAF along with any leachate collected will be pumped from the tanks as it is required for mixing with other feedstocks for composting. All air vented from the tanks will be directed to the biofilter to remove odors before being released to the atmosphere.

5.0 End Market Uses

The finished product is high quality organic compost. End market strategies for finished product include agricultural, landscaping, nursery, public agencies and private individual markets. The agriculture industry uses the product as a soil amendment to improve the quality of agricultural lands. The landscape industry, which includes residential and commercial landscape companies, use the product as soil amendments, to improve the quality of soil for plantings and reduce the cost of soil replacement. Nurseries use the product to improve soils for tree and ornamental plantings and to protect seedlings. The finished product is also used to provide moisture control around plantings in both the landscape and nursery markets. Many public agencies are in the market for our material for redevelopment projects, weed abatement, roadway maintenance and other landscaping projects.

The finished product will be distributed to end users in bulk. The project will produce approximately 90 tons of compost per day (5 days per week). Approximately eight truck loads of finished product will be removed from the site each week day.

6.0 Product Testing

The process is monitored continuously through the GORE™ Cover control system during the 28 day Phase I and during the 14 day Phase II. During these phases the material is covered with the GORE™ Cover which serves as an effective insulating layer ensuring that all areas of the heap achieve sufficient temperature. Temperature is monitored continuously; the records are logged in the computer based control system used to operate the aeration blowers. These temperature recordings will be used to verify that temperatures meet the requirements of processes to further reduce pathogens (PFRP) and vector attraction reduction (VAR).

Finished soil amendment and soil blend samples are typically analyzed each month for stability or maturity, soluble salts, Fecal Coliform, Salmonella, pH, manmade inerts, film plastic, and the following metals on a dry weight basis: arsenic, cadmium, chromium, copper, lead, mercury, molybdenum, nickel, selenium, and zinc.

7.0 Storm Water Management

A GORE™ Cover facility includes the construction of an impervious surface for heap processing and curing. Covers over the heaps prevent rainwater from coming into contact with material in the composting process. The material remains under cover for 5 weeks. After 5 weeks of composting, all pathogen reduction requirements have been satisfied and the material can be distributed for agricultural and landscaping use. At the proposed facility, the material will be retained on site for an additional 60 days to cure. This curing phase will increase the value of the compost.

The mixture of wastes which starts the composting process has a moisture content of 60%. In the 5 weeks of composting under cover, the moisture content is reduced to approximately 35%. Compost absorbs water. Compost at 35% moisture content has a very high water absorption capability. As such there is a minimal amount of sediment in the runoff from the curing area.

The rate and quantity of runoff will be controlled through the construction of a dry extended detention basin. Stormwater sediment controls to be constructed with this project include a concrete sediment basin, a sediment forebay and a dry extended detention basin.

8.0 Leachate Collection

Leachate will be generated from active processing heaps, and from drainage through the biofilter. Leachate is collected and will be pumped to the DAF storage tank for reuse in the composting system. Because the material is under GORE covers, the amount of leachate collected is minimal. Experience at other Gore facilities has shown that the material under each heap generates approximately one gallon of leachate per day. The covers prevent rainfall from coming into contact with the processing material. Any rain which falls on the covers is directed to the storm drain system.

9.0 Odor Management Plan

Odor control is an essential element for all recycling operations. The GORE™ Cover technology was selected for its ability to control odor. This has been demonstrated at the more than 150 organic recycling facilities which use the GORE™ system. The GORE™ system scope of supply includes the entire heap processing system. This includes the covers, the temperature and oxygen probes, the blowers, the control system, the trench system and operator training. Odor from the GORE™ Cover System is 97% less than the odor released from a similar size uncovered windrow system.

Other than the heap processing, the other area of potential odor generation is the receiving building. Exhaust air from the receiving building will pass through a biofilter prior to entering the atmosphere. Biofilters have a long history of successful odor control with odor removal efficiencies in excess of 95% . The biofilter combined with operating procedures which remove all waste from the receiving building on a daily basis will control odor from the receiving building.

10.0 Employment

The proposed project will create 9 full time jobs. The positions created will include laborers and equipment operators. The project will also provide indirect jobs through site and equipment maintenance as well as jobs associated with trucking feedstocks and finished product. Employment during construction is expected to be 20 to 25 positions. Additional benefits to the local economy will include supply of materials such as concrete and asphalt. Chesapeake

AgriSoil LLC intends to hire locally and use construction contractors to the greatest extent possible.

CHESAPEAKE AGRISOIL FACILITY
28338 ENVIRO WAY
SEAFORD, DELAWARE

APPLICANT:
CHESAPEAKE AGRISOIL, LLC
28338 ENVIRO WAY
SEAFORD, DELAWARE

ZONING:
AR–1

TAX MAP:
1–32–11.00 PARCEL 41

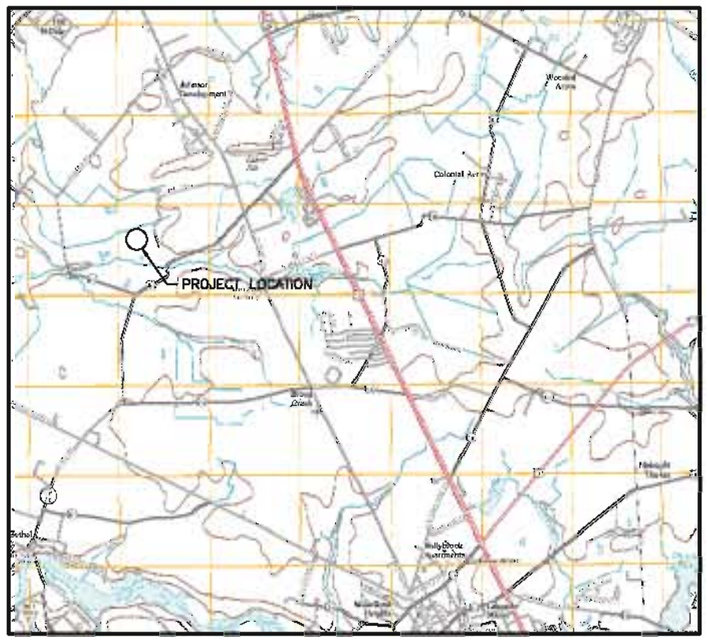

LOCUS PLAN

0 1 2
SCALE–MILES

SHEET	TITLE
C–1	PROJECT LOCATION
C–2	EXISTING CONDITIONS
C–3	SITE PLAN
C–4	GRADING PLAN
C–5	COMPOST SECTIONS–SHEET 1
C–6	COMPOST SECTIONS–SHEET 2
C–7	BIOFILTER PLAN & SECTIONS
A–1	RECEIVING BUILDING PLAN
A–2	RECEIVING BUILDING ELEVATIONS–SHEET 1
A–3	RECEIVING BUILDING ELEVATIONS–SHEET 2

STRUCTOR ENGINEERING INC.
NORTH EASTON, MASSACHUSETTS
774–353–6017

LANDS N/F OF
RALPH H. GIVENS
TAX MAP: 1-32-6, P. 87

LANDS N/F OF
RALPH H. & JANE L. GIVENS
TAX MAP: 1-32-6, P. 88

LANDS N/F OF
DONALD R. EISENBREY
TAX MAP: 1-32-6, P. 40

LANDS N/F OF
DAVID A. & REGINA M. BURLING
TAX MAP: 1-32-6, P. 93.01

LANDS N/F OF
VICTOR E. MOORE
TAX MAP: 1-32-6, P. 92

LANDS N/F OF
VICTOR E. MOORE
TAX MAP: 1-32-6, P. 92

LANDS N/F OF
VICTOR E. MOORE
TAX MAP: 1-32-6, P. 92

EXISTING PLANT

PROPOSED CHESAPEAKE AGRISOIL FACILITY

AREA OF DETAIL DRAWINGS C-2, C-3 AND C-4

LANDS N/F OF
FREDERICK M. O'NEAL
TAX MAP: 1-32-11, P. 37.03

LANDS N/F OF
FREDERICK M. & AGNES W. O'NEAL
TAX MAP: 1-32-11, P. 39

LANDS N/F OF
DESOSARRAN SINGH
TAX MAP: 1-32-11, P. 37.02

LANDS N/F OF
PETER H. SINGLETON
TAX MAP: 1-32-11, P. 45.05

STATE ROUTE 13A

TO SALISBURY

SUSSEX COUNTY ROAD NO. 485
(50' R/W)

NOTES:
1. WETLANDS SHOWN ARE FROM THE NATIONAL WETLANDS INVENTORY BY THE U. S. FISH & WILDLIFE SERVICE. WETLANDS HAVE NOT BEEN FIELD VERIFIED.
2. PROPERTY LINE AND TOPOGRAPHIC SURVEY SHOWN ARE FROM THE CONDITIONAL USE APPLICATION PREPARED PERDUE AGRIRECYLE LLC 1999 BY McCRONE ENGINEERING

0 200 400 600
SCALE 1"= 200'

REV	REVISION RECORD	DESIGN	CHK'D	APPV'D	DATE
0	ISSUED FOR PERMITTING			WWH	10/11/12

STRUCTOR ENGINEERING INC
NORTH EASTON, MASSACHUSETTS
774-353-6017

SEAL

PROJECT NO 1000
SCALE AS NOTED
DRAWN BY
CHECKED BY
APPROVED BY W. HALL
DATE JULY 5, 2012

CHESAPEAKE AGRISOIL FACILITY
28338 Enviro Way
Seaford, Delaware

PROJECT LOCATION

DWG NO
C-1

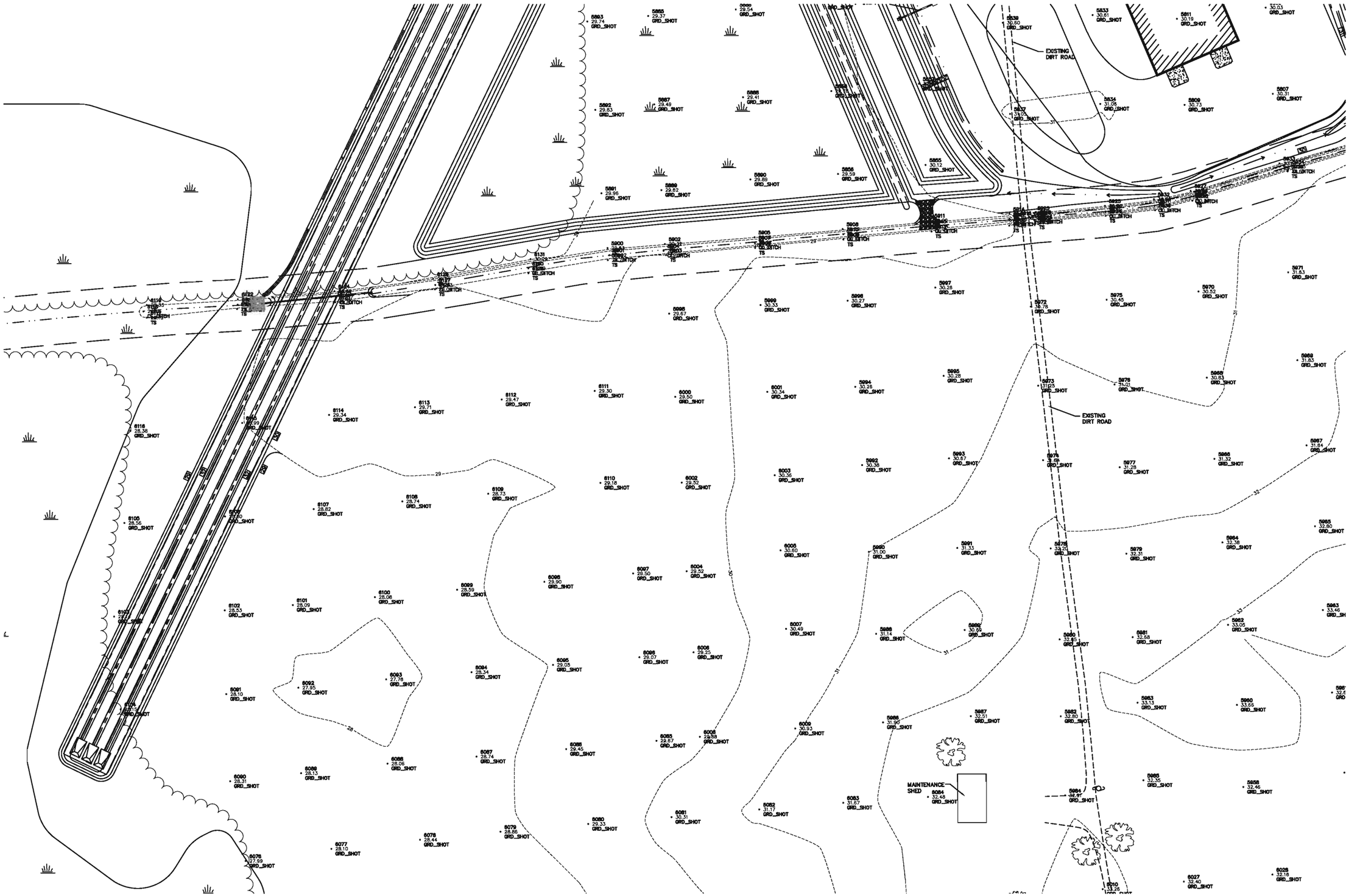

REV	REVISION RECORD	DESIGN	CHK'D	APPV'D	DATE
0	ISSUED FOR PERMITTING			WWH	10/11/12

STRUCTOR ENGINEERING INC
NORTH EASTON, MASSACHUSETTS
774-353-6017

SEAL

PROJECT NO 1000
SCALE AS NOTED
DRAWN BY
CHECKED BY
APPROVED BY W. HALL
DATE JULY 5, 2012

CHESAPEAKE AGRISOIL FACILITY
28338 Enviro Way
Seaford, Delaware

EXISTING CONDITIONS

DWG NO
C-2

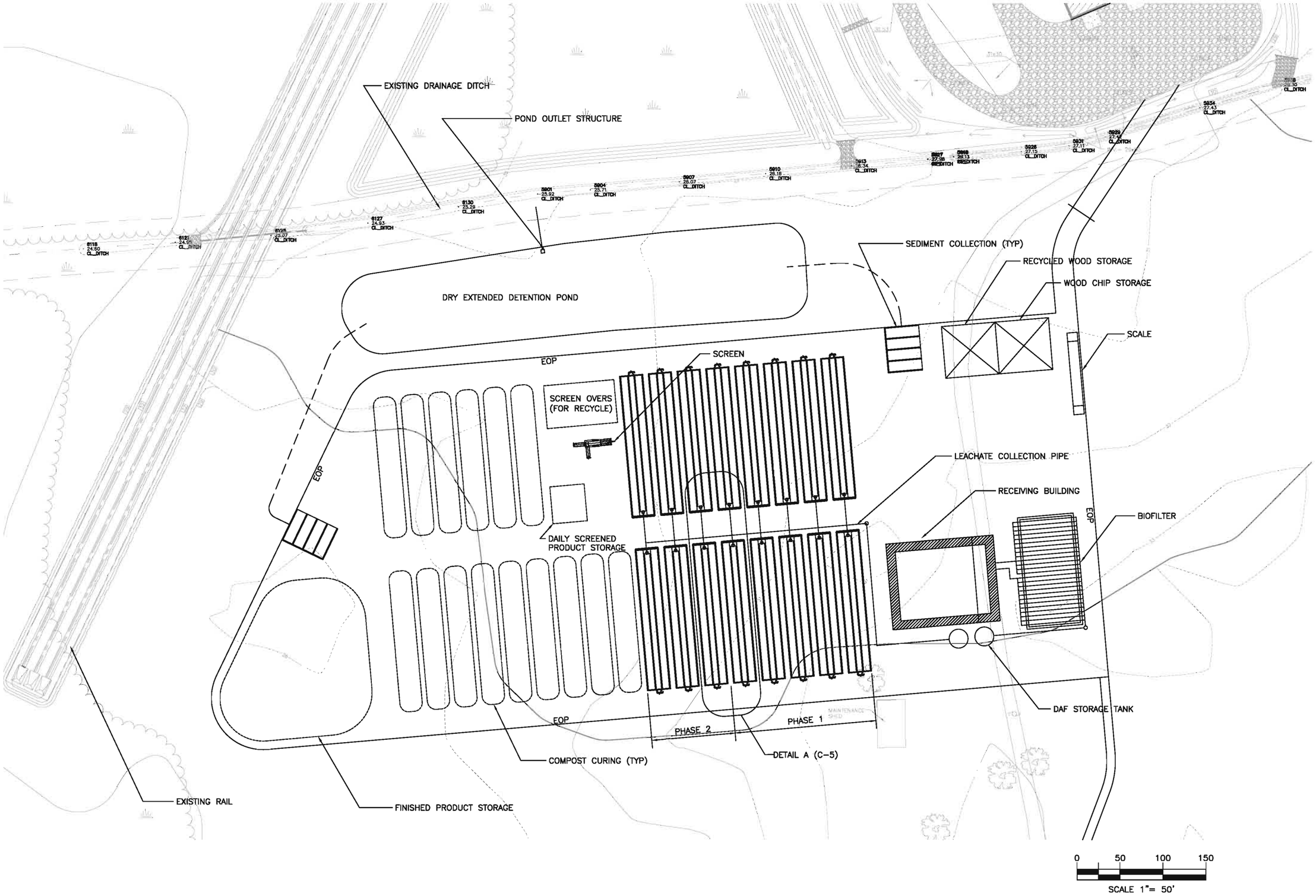

REV	REVISION RECORD	DESIGN	CHK'D	APPV'D	DATE
0	ISSUED FOR PERMITTING			WWH	10/11/12

STRUCTOR ENGINEERING INC
NORTH EASTON, MASSACHUSETTS
774-353-6017

SEAL

PROJECT NO 1000
SCALE AS NOTED
DRAWN BY
CHECKED BY
APPROVED BY W. HALL
DATE JULY 5, 2012

CHESAPEAKE AGRISOIL FACILITY
28338 Enviro Way
Seaford, Delaware

SITE PLAN

DWG NO
C-3

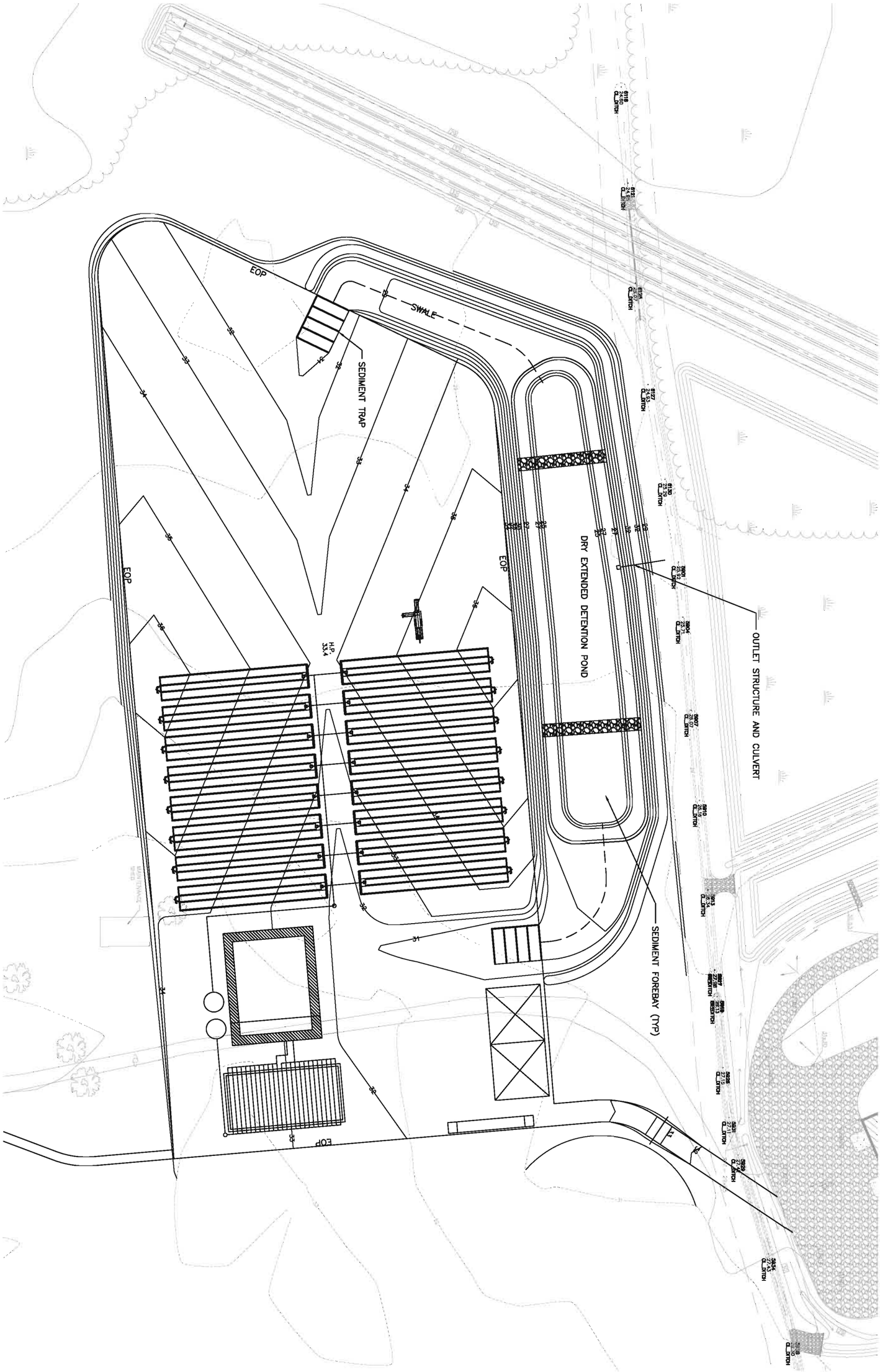

DWG NO C-4	CHESAPEAKE AGRISOIL FACILITY 28338 Enviro Way Seaford, Delaware	PROJECT NO 1000	SEAL	STRUCTOR ENGINEERING INC NORTH EASTON, MASSACHUSETTS 774-353-6017	
	GRADING PLAN	SCALE AS NOTED			
		DRAWN BY			
		CHECKED BY			
		APPROVED BY W. HALL			
		DATE JULY 5, 2012			

REV	REVISION RECORD	DESIGN	CHK'D	APPV'D	DATE
0	ISSUED FOR PERMITTING			WWH	10/11/12

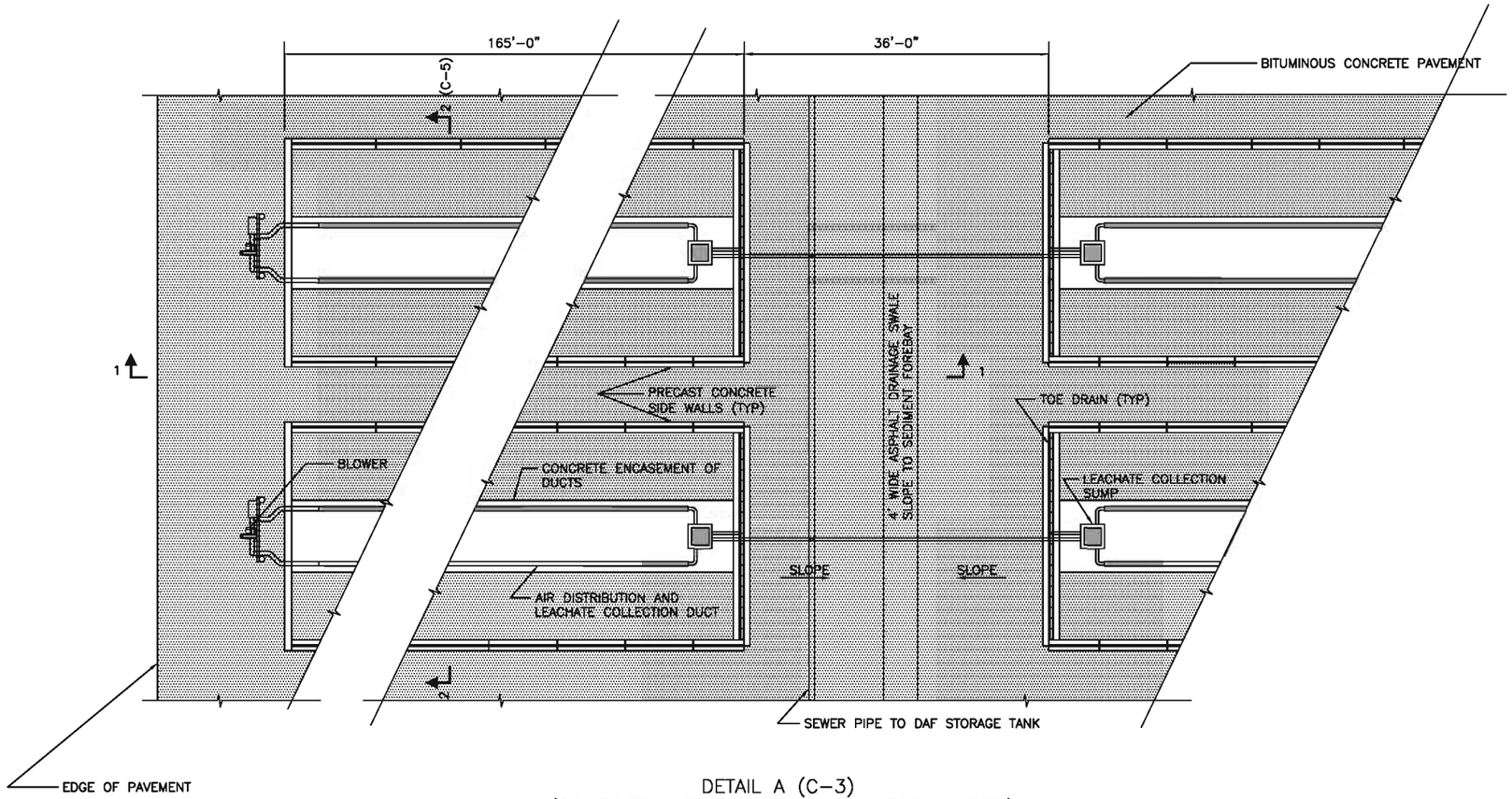

DETAIL A (C–3)
(COMPOST MATERIAL NOT SHOWN FOR CLARITY)
SCALE 1/8"=1'–0"

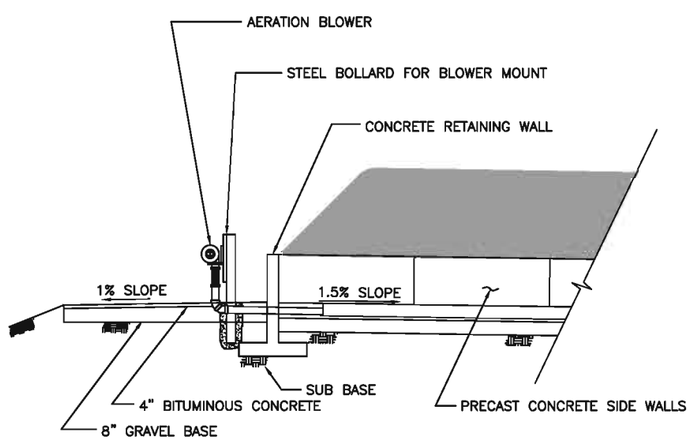

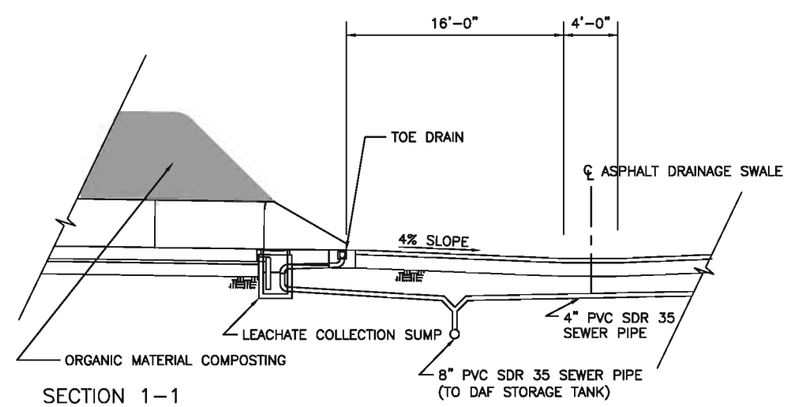

SECTION 1–1
SCALE 3/16"=1'–0"

REV	REVISION RECORD	DESIGN	CHK'D	APPV'D	DATE
0	ISSUED FOR PERMITTING			WWH	10/11/12

STRUCTOR ENGINEERING INC
NORTH EASTON, MASSACHUSETTS
774–353–6017

SEAL

PROJECT NO 1000
SCALE AS NOTED
DRAWN BY
CHECKED BY
APPROVED BY W. HALL
DATE JULY 5, 2012

CHESAPEAKE AGRISOIL FACILITY
28338 Enviro Way
Seaford, Delaware

COMPOST SECTIONS–SHEET 1

DWG NO
C–5

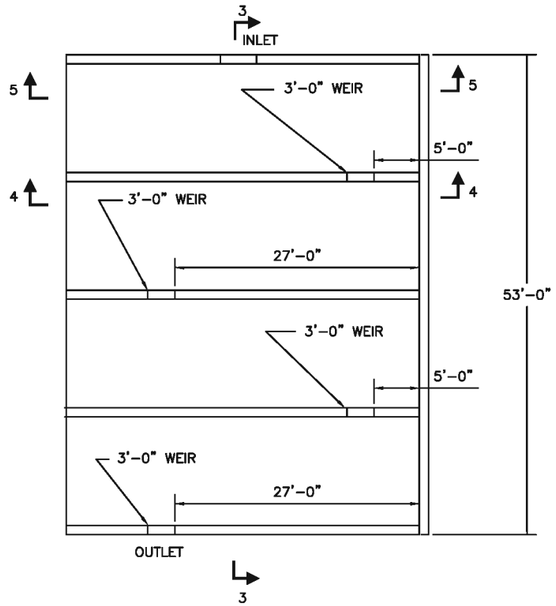

PLAN–SEDIMENT FOREBAY
(C–3)
SCALE 1/8"=1'–0"

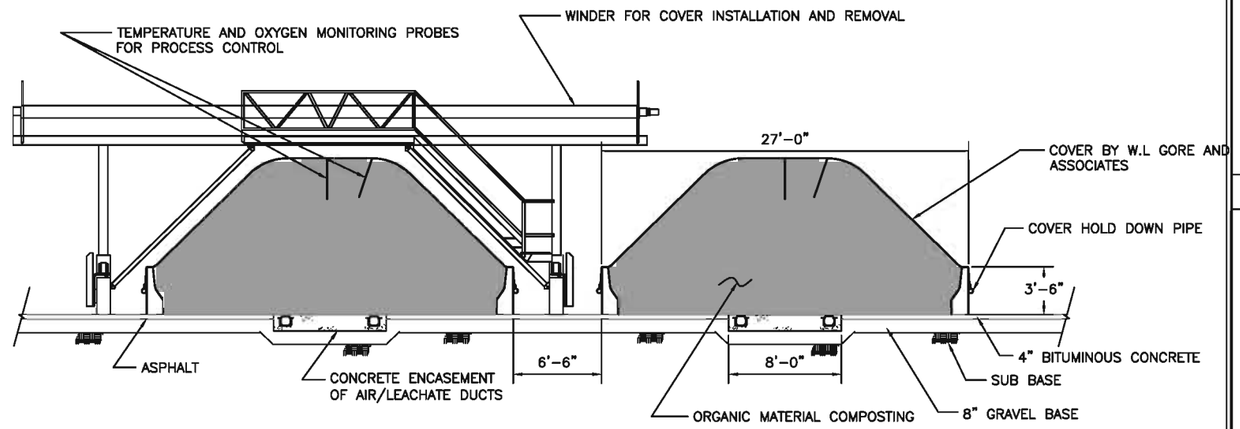

SECTION 2–2
(PHASE 1 AND 2 HEAPS)(C–3)
SCALE 3/16"=1'–0"

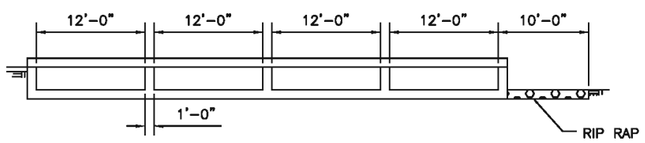

SECTION 3–3

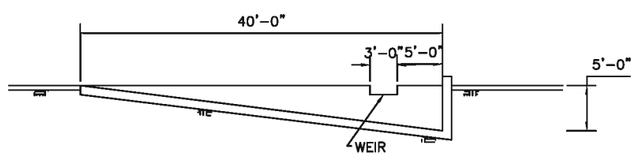

SECTION 4–4

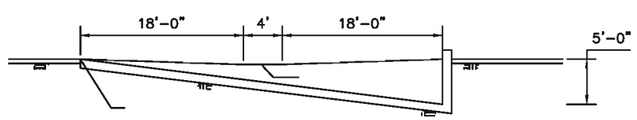

SECTION 5–5

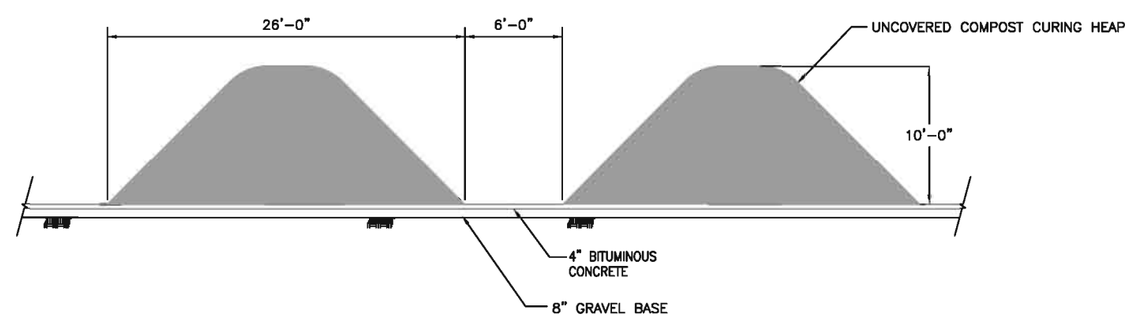

SECTION 2–2
(COMPOST CURING HEAPS)(C–3)
SCALE 3/16"=1'–0"

REV	REVISION RECORD	DESIGN	CHK'D	APPV'D	DATE
0	ISSUED FOR PERMITTING			WWH	10/11/12

STRUCTOR ENGINEERING INC
NORTH EASTON, MASSACHUSETTS
774–353–6017

SEAL

PROJECT NO 1000
SCALE AS NOTED
DRAWN BY
CHECKED BY
APPROVED BY W. HALL
DATE JULY 5, 2012

CHESAPEAKE AGRISOIL FACILITY
28338 Enviro Way
Seaford, Delaware

COMPOST SECTIONS–SHEET 2

DWG NO
C–6

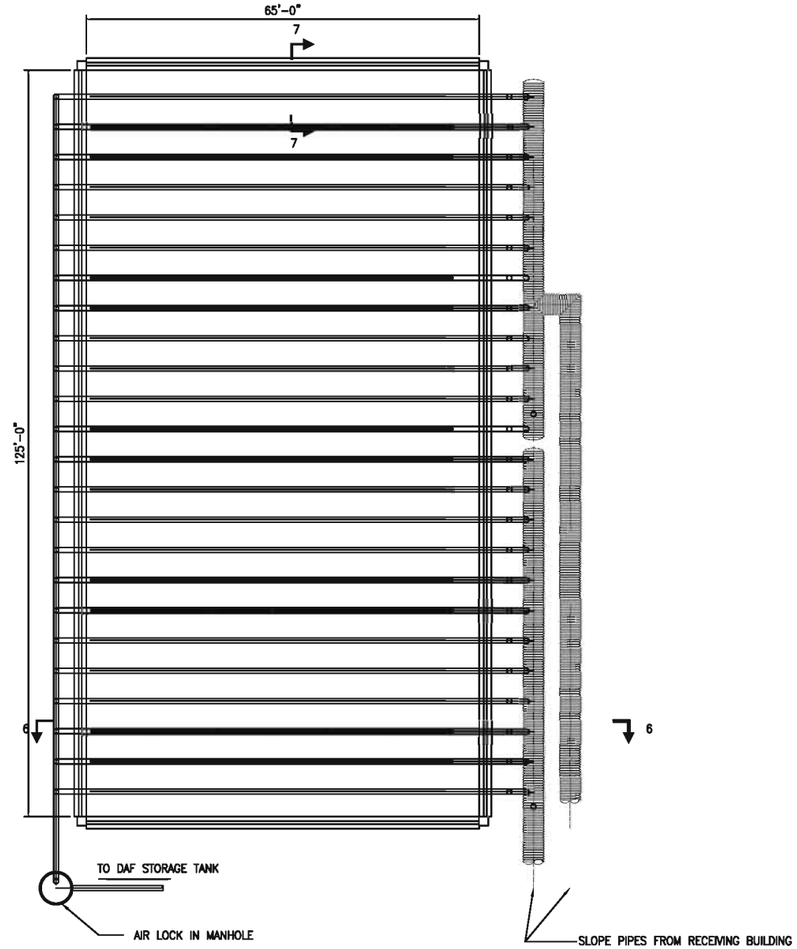

PLAN OF BIOFILTER
SCALE 3/32" = 1'-0"

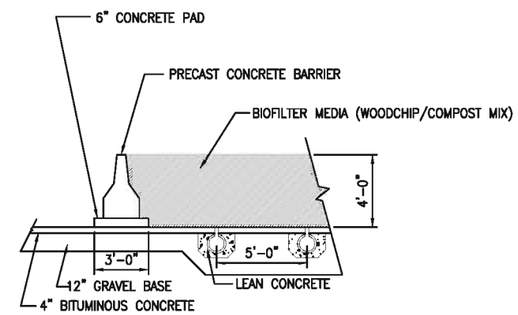

SECTION 7-7
SCALE 1/4"=1'-0"

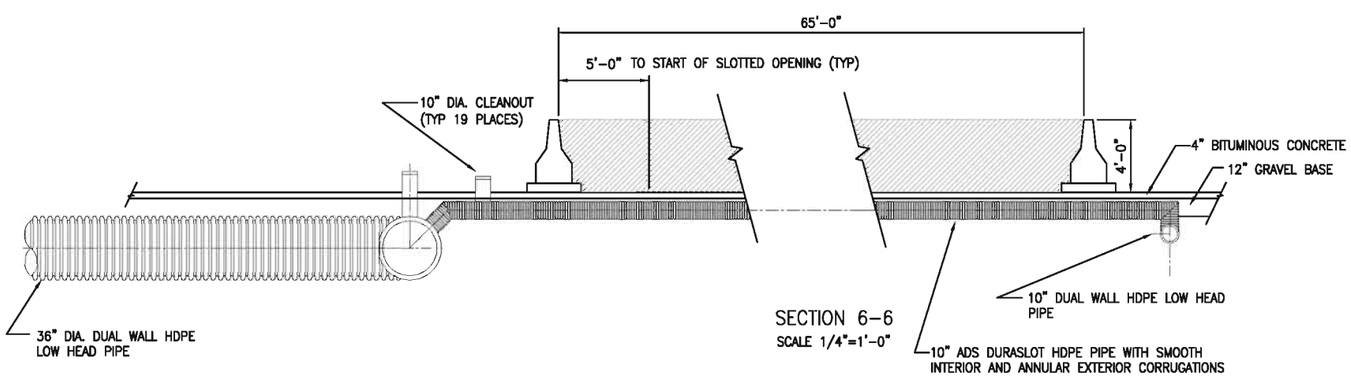

SECTION 6-6
SCALE 1/4"=1'-0"

REV	REVISION	DESIGN	CHK'D	APPV'D	DATE
0	ISSUED FOR PERMITTING			WWH	10/11/12
	RECORD				

STRUCTOR ENGINEERING INC
NORTH EASTON, MASSACHUSETTS
774-353-6017

SEAL

PROJECT NO 1000
SCALE AS NOTED
DRAWN BY
CHECKED BY
APPROVED BY W. HALL
DATE JULY 5, 2012

CHESAPEAKE AGRISOIL FACILITY
28338 Enviro Way
Seaford, Delaware

BIOFILTER PLAN & SECTIONS

DWG NO
C-7

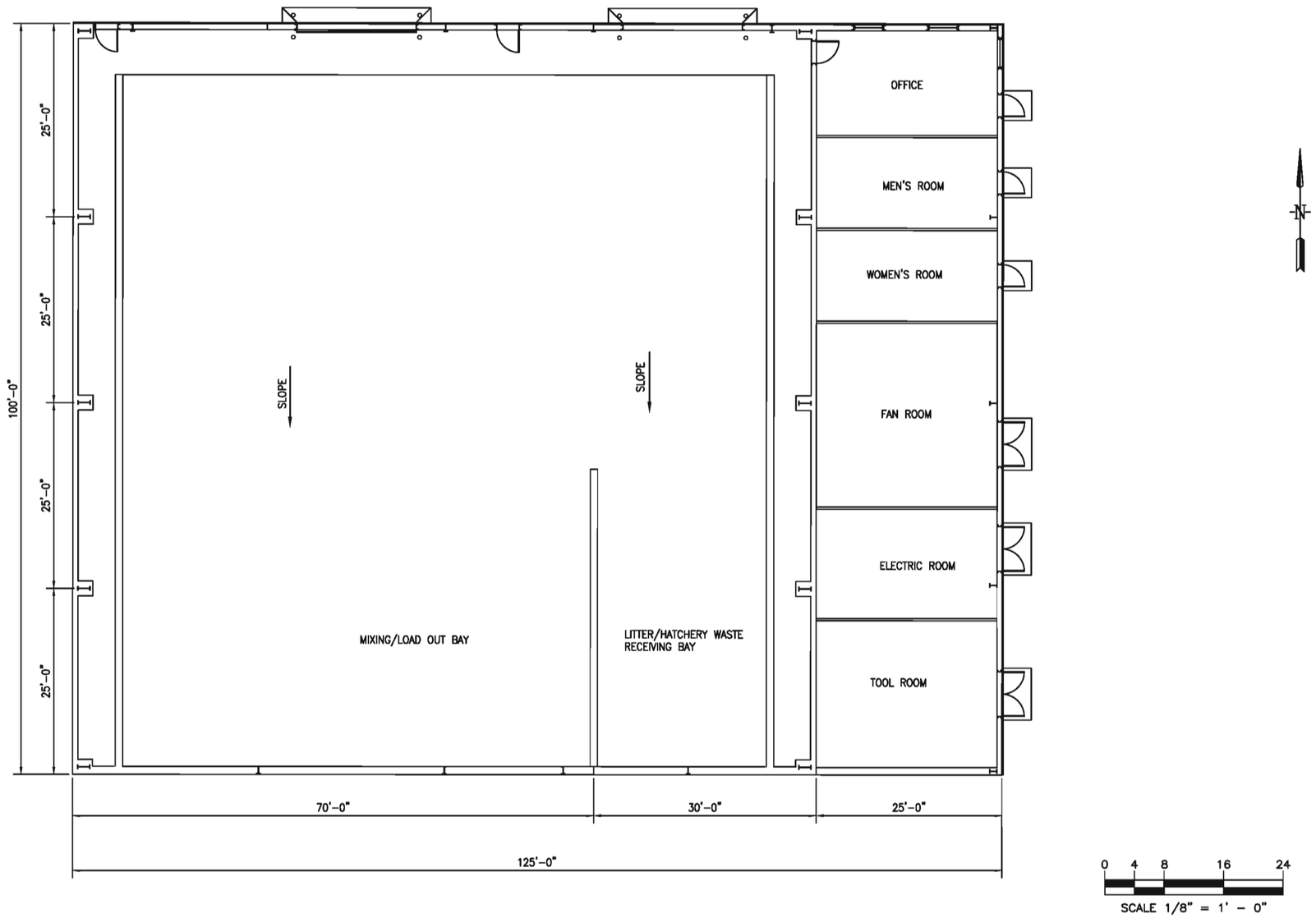

PLAN

REV	REVISION RECORD	DESIGN	CHK'D	APPV'D	DATE
0	ISSUED FOR PERMITTING			WWH	10/11/12

STRUCTOR ENGINEERING INC
NORTH EASTON, MASSACHUSETTS
774-353-6017

SEAL

PROJECT NO 1000
SCALE AS NOTED
DRAWN BY
CHECKED BY
APPROVED BY W. HALL
DATE JULY 5, 2012

CHESAPEAKE AGRISOIL FACILITY
28338 Enviro Way
Seaford, Delaware

PLAN-RECEIVING BUILDING

DWG NO
A-1

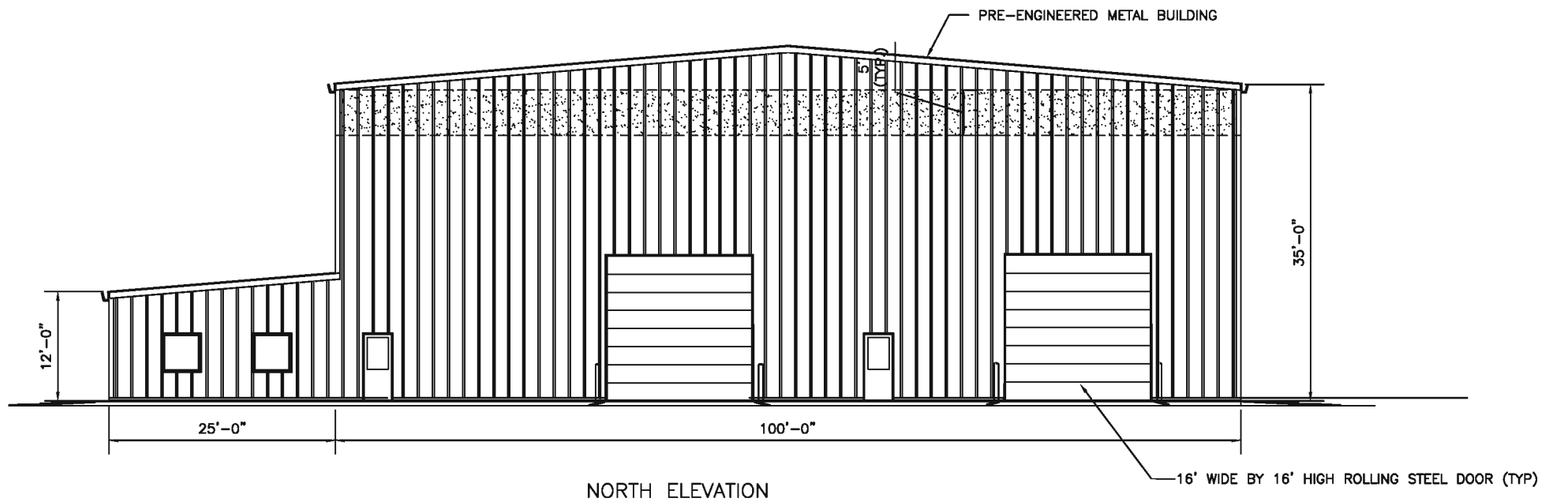

NORTH ELEVATION

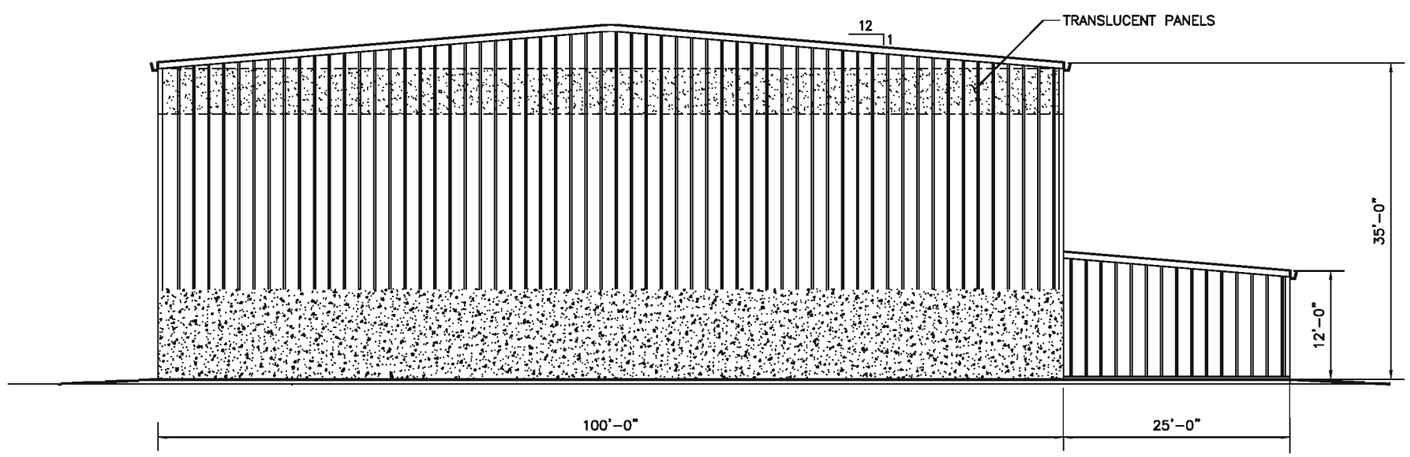

SOUTH ELEVATION

0 4 8 16 24

SCALE 1/8" = 1' - 0"

REV	REVISION RECORD	DESIGN	CHK'D	APPV'D	DATE
0	ISSUED FOR PERMITTING			WWH	10/11/12

STRUCTOR ENGINEERING INC
NORTH EASTON, MASSACHUSETTS
774-353-6017

SEAL

PROJECT NO 1000
SCALE AS NOTED
DRAWN BY
CHECKED BY
APPROVED BY W. HALL
DATE JULY 5, 2012

CHESAPEAKE AGRISOIL FACILITY
28338 Enviro Way
Seaford, Delaware

RECEIVING BUILDING ELEV-SHT 1

DWG NO
A-2

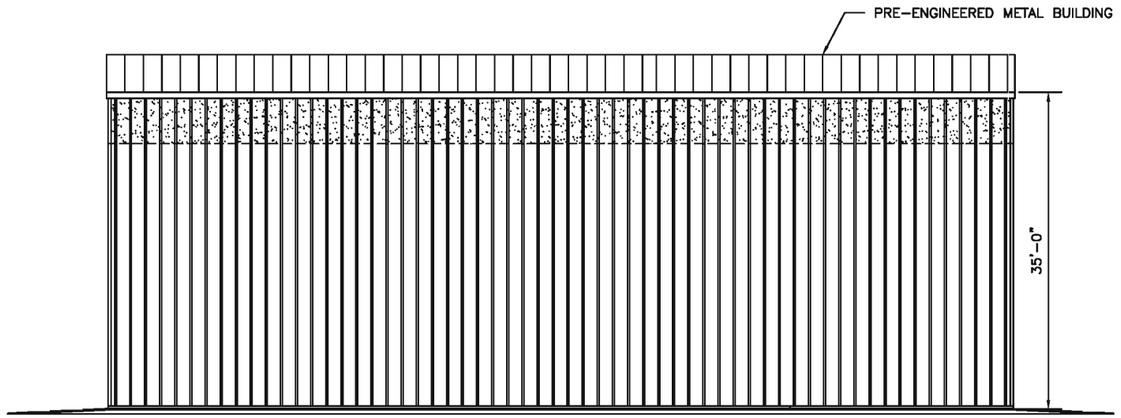

WEST ELEVATION

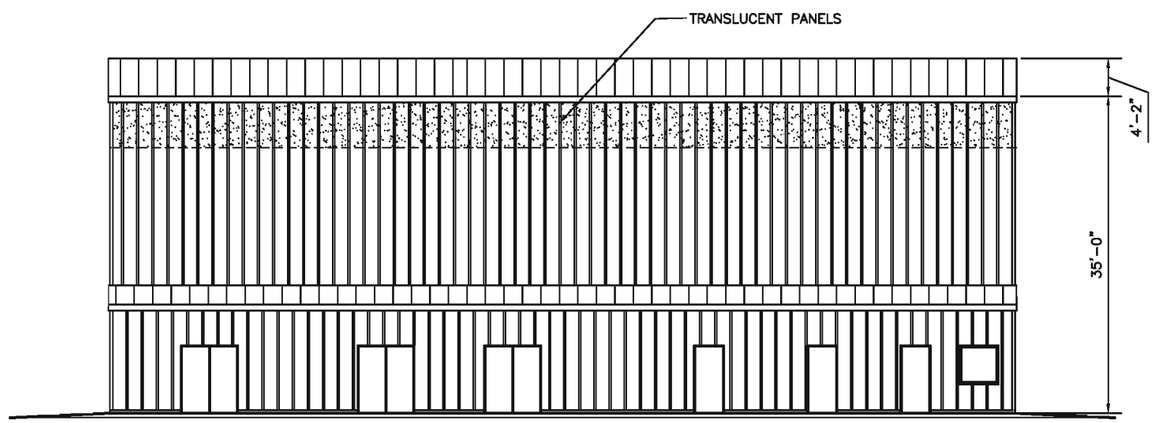

EAST ELEVATION

0 4 8 16 24

SCALE 1/8" = 1' – 0"

REV	REVISION RECORD	DESIGN	CHK'D	APPV'D	DATE
0	ISSUED FOR PERMITTING			WWH	10/11/12

STRUCTOR ENGINEERING INC
NORTH EASTON, MASSACHUSETTS
774-353-6017

SEAL

PROJECT NO 1000
SCALE AS NOTED
DRAWN BY
CHECKED BY
APPROVED BY W. HALL
DATE JULY 5, 2012

CHESAPEAKE AGRISOIL FACILITY
28338 Enviro Way
Seaford, Delaware

RECEIVING BUILDING ELEV-SHT 2

DWG NO
A-3

Preliminary Land Use Service (PLUS)

Chesapeake Agrisoil Facility
PLUS 2012-11-02

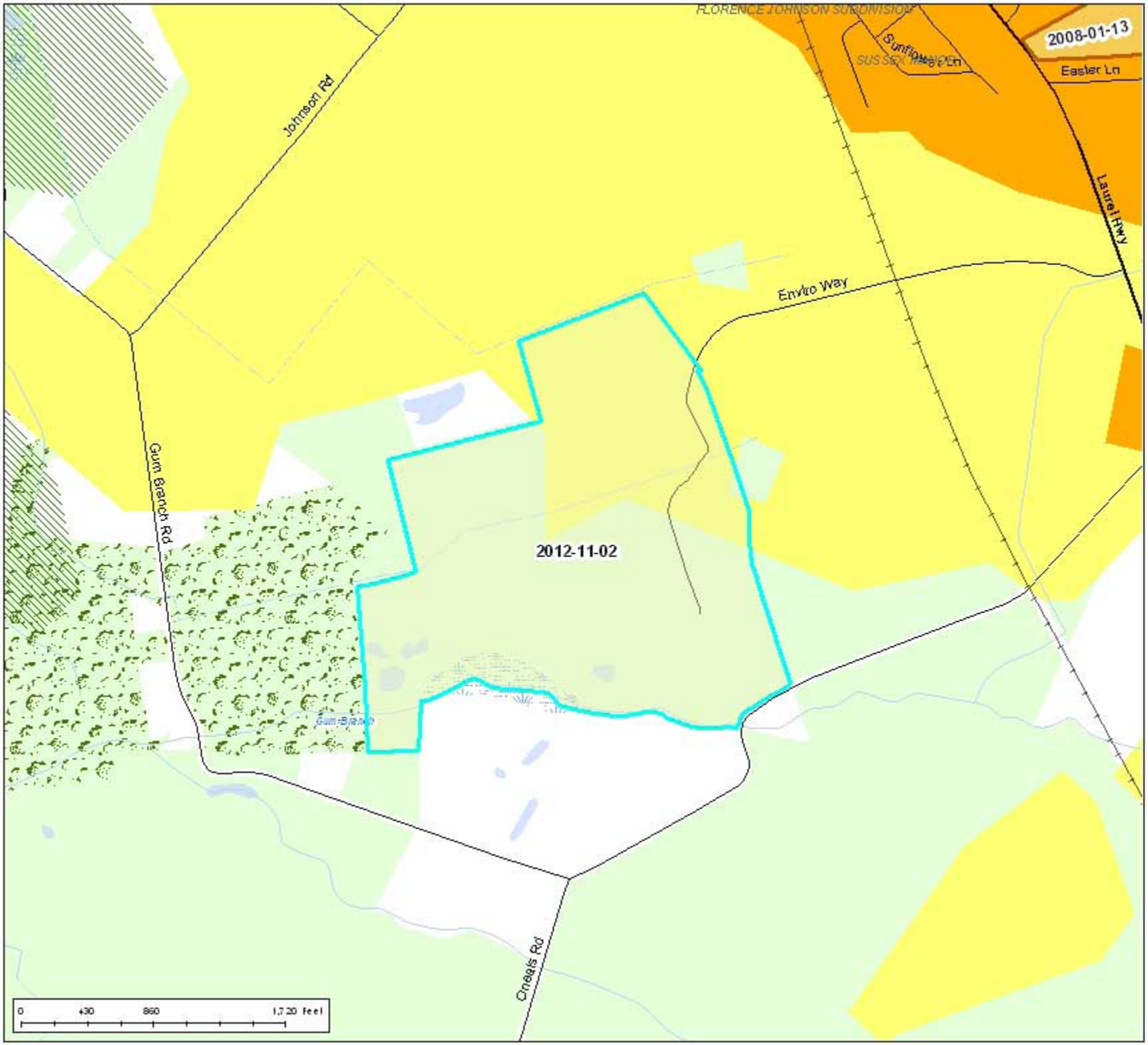

PLUS Project Areas
Municipalities
State Parks
Forestry Easements
Purchased Dev. Rights
Ag District

2010 State Strategies

Level 1
Level 2
Level 3
Level 4
Out of Play
Nat. Res. & Rec. Priorities
Working Forests
Highest Value Agriculture

1:10,000

Produced by the Delaware Office of State Planning Coordination, stateplanning.delaware.gov

Preliminary Land Use Service (PLUS)

Chesapeake Agrisoil Facility PLUS 2012-11-02

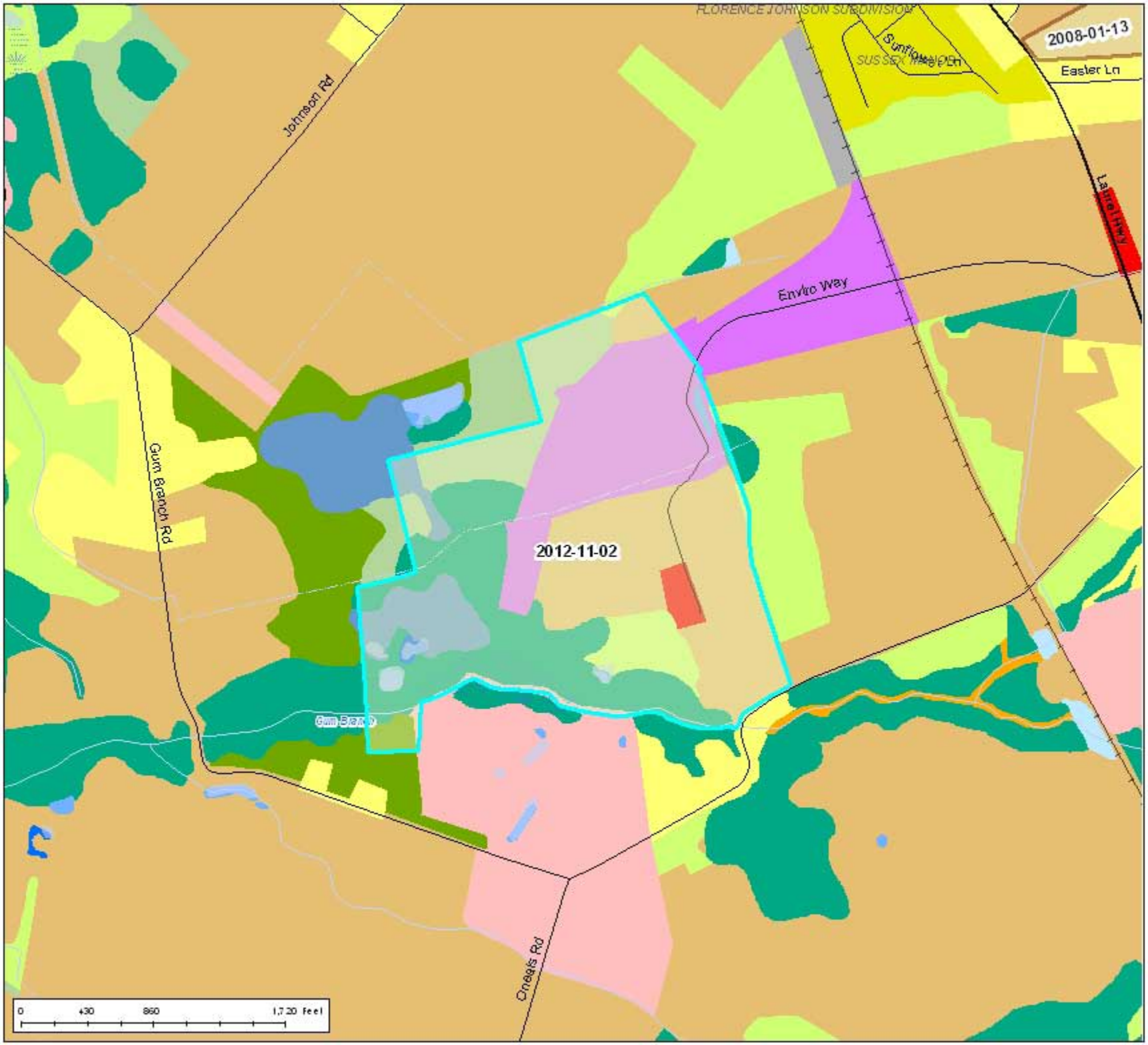

Project Areas
Municipalities

Land Use/Land Cover
- Single Family Dwellings
- Multi-Family Dwellings
- Mobile Home Parks/Courts
- Commercial
- Industrial
- Trans./Comm./Utilities
- Mixed Urban/Built-up
- Institutional/Governmental
- Recreational
- Farms, Pasture, Cropland
- CAFO
- Rangeland
- Orchards/Nurseries
- Deciduous Forest
- Evergreen Forest
- Mixed Forest
- Shrub/Brush Rangeland
- Clear-cut
- Reservoirs and Impoundments
- Marinas/Ports/Docks
- Open Water
- Emergent Wetlands
- Forested Wetlands
- Scrub/Shrub Wetlands
- Sandy Areas
- Extraction/Transition

1:10,000

Produced by the Delaware Office of State Planning Coordination, stateplanning.delaware.gov

Preliminary Land Use Service (PLUS)

Chesapeake Agrisoil Facility
PLUS 2012-11-02

Project Areas

Municipalities

2012 Aerial Photography: Provided by Delaware Office of Management and Budget

1:4,869

Produced by the Delaware Office of State Planning Coordination. stateplanning.delaware.gov